DATE	REV	REVISION RECORD	AUTH	DR	CHK

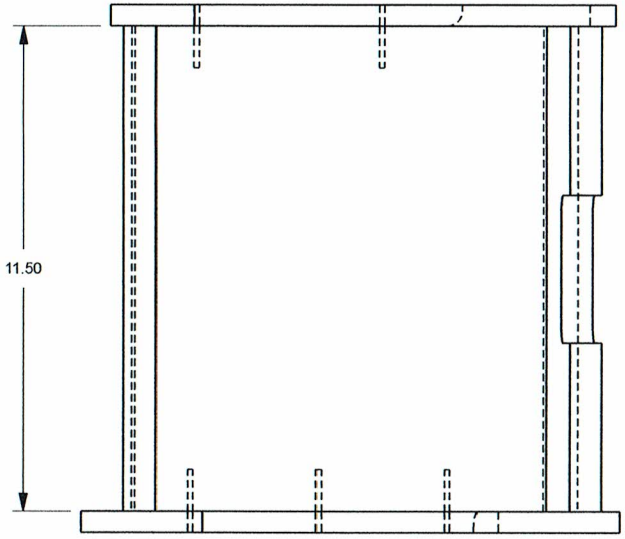

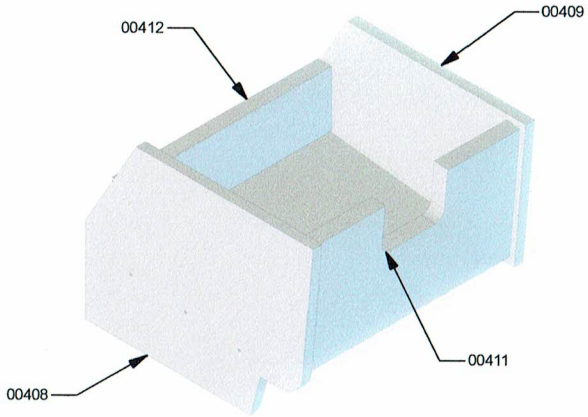

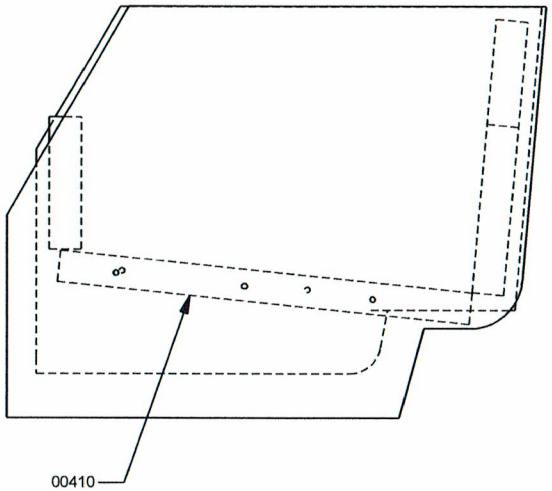

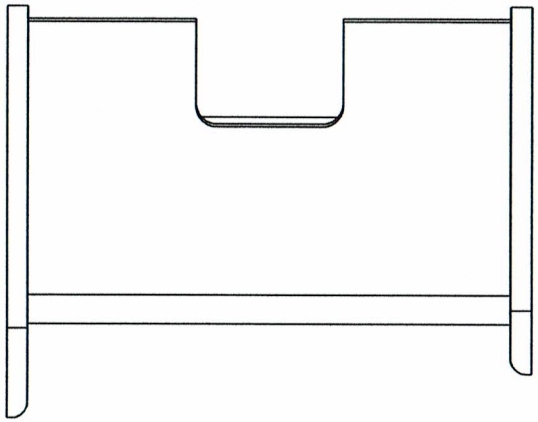

REF: 2020 SILVERADO

DRAWN ROMAN RZASA	DATE 26MY20	COMPANY ALMOST PERFECT DESIGN	
CHK	DATE		
QUAL	DATE	PART NAME MINI-CONSOLE	
MFG	DATE		
APVD	DATE	SIZE D / REF NO / DWG NO 00407	REV ---
		SCALE 1 : 1 / MATL	SHEET 1 OF 1

8 7 6 5 4 3 2 1

D C B A