## Diagram 1

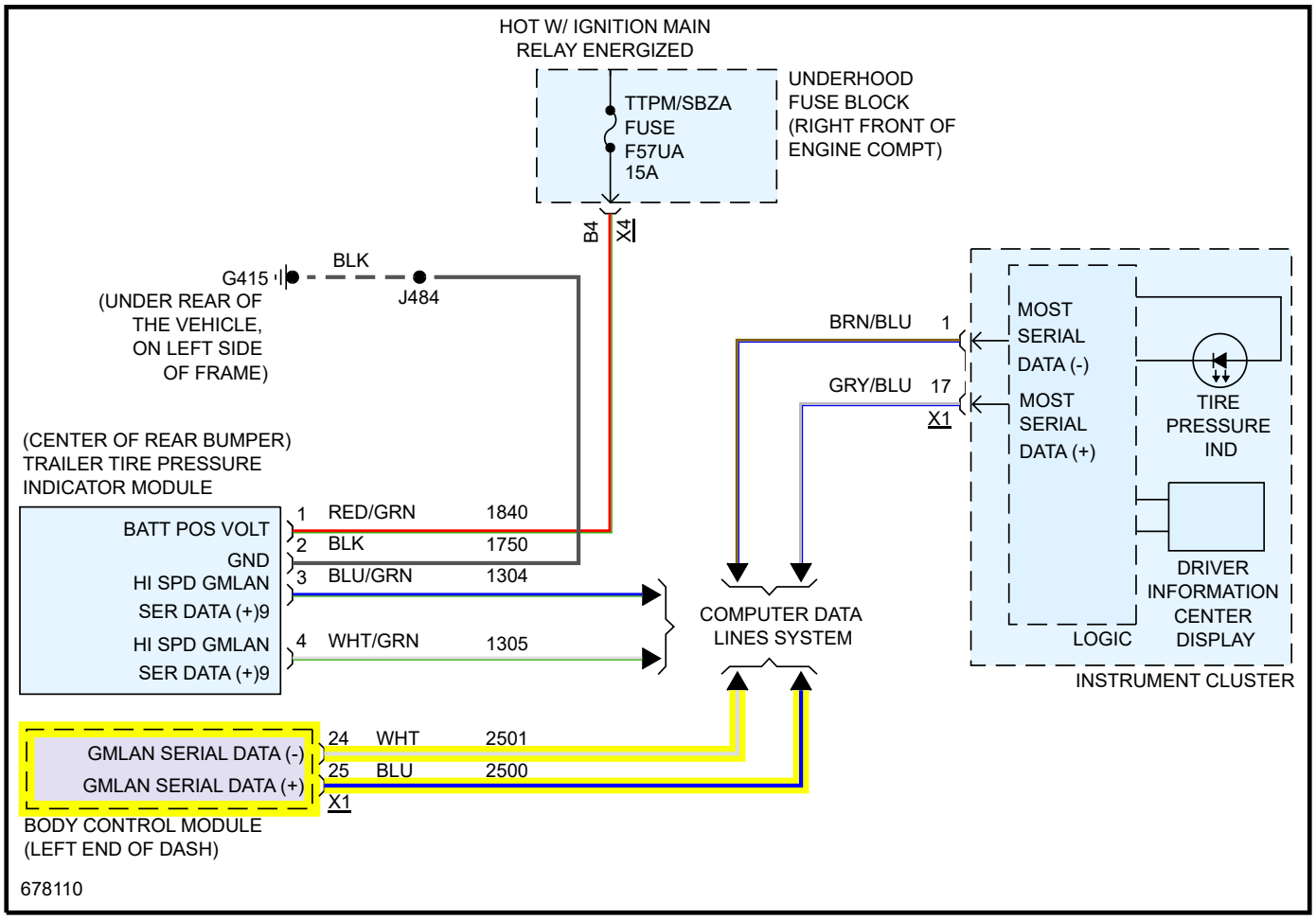
HOT W/ IGNITION MAIN
RELAY ENERGIZED
TTPM/SBZA
FUSE
F57UA
15A
UNDERHOOD
FUSE BLOCK
(RIGHT FRONT OF
ENGINE COMPT)
B4
X4
BLK
G415
J484
(UNDER REAR OF
THE VEHICLE,
ON LEFT SIDE
OF FRAME)
BRN/BLU
1
GRY/BLU
17
X1
MOST
SERIAL
DATA (-)
MOST
SERIAL
DATA (+)
TIRE
PRESSURE
IND
DRIVER
INFORMATION
CENTER
DISPLAY
LOGIC
INSTRUMENT CLUSTER
(CENTER OF REAR BUMPER)
TRAILER TIRE PRESSURE
INDICATOR MODULE
BATT POS VOLT
GND
HI SPD GMLAN
SER DATA (+)9
HI SPD GMLAN
SER DATA (+)9
1 RED/GRN 1840
2 BLK 1750
3 BLU/GRN 1304
4 WHT/GRN 1305
COMPUTER DATA
LINES SYSTEM
GMLAN SERIAL DATA (-)
GMLAN SERIAL DATA (+)
24 WHT 2501
25 BLU 2500
X1
BODY CONTROL MODULE
(LEFT END OF DASH)
678110