Right Doors

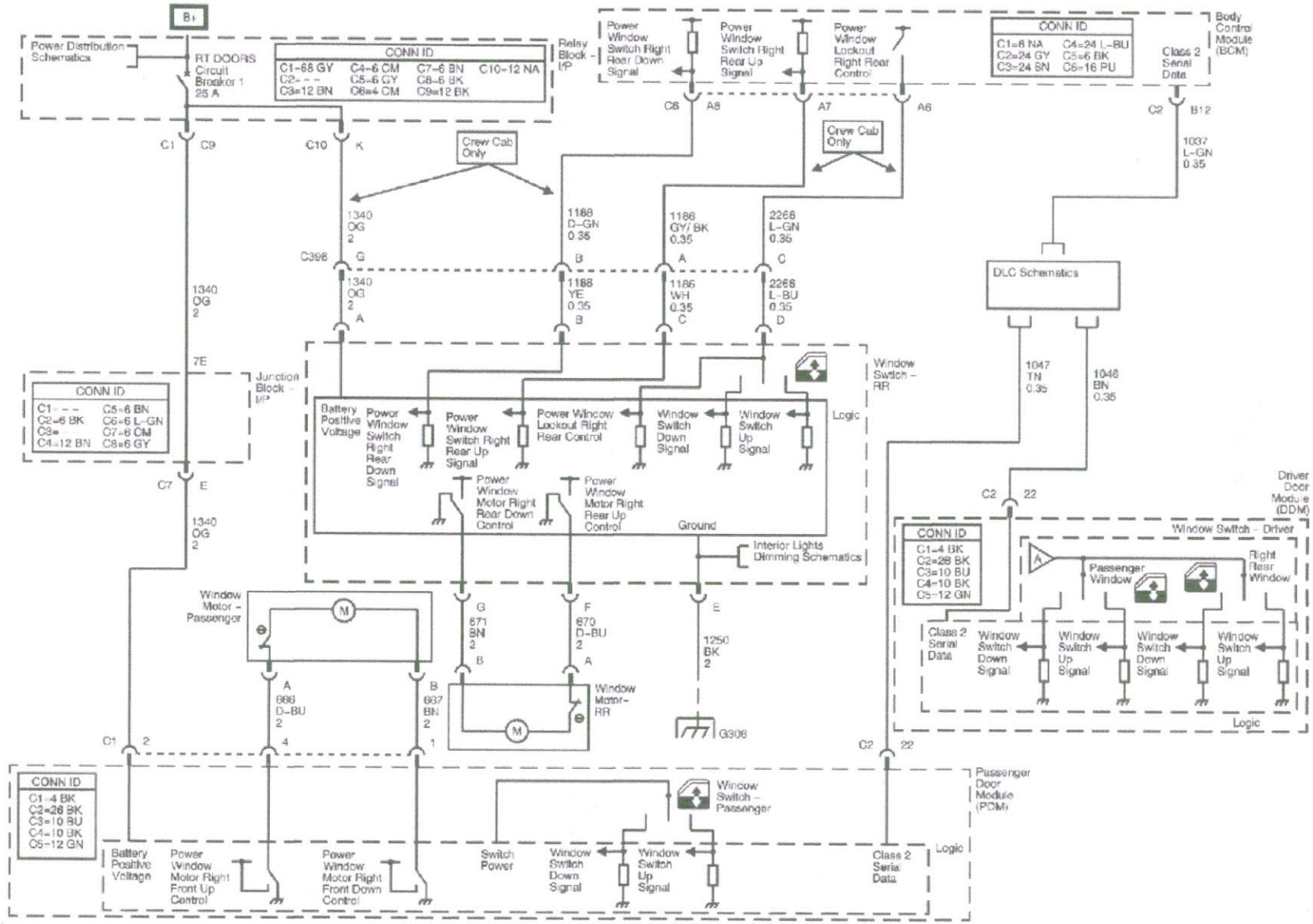
B+
Power Distribution Schematics
RT DOORS Circuit Breaker 1 25 A
CONN ID
C1=68 GY C4=6 CM C7=6 BN C10=12 NA
C2=- - - C5=6 GY C8=6 BK
C3=12 BN C6=4 CM C9=12 BK
Relay Block - I/P
Power Window Switch Right Rear Down Signal
Power Window Switch Right Rear Up Signal
Power Window Lockout Right Rear Control
CONN ID
C1=8 NA C4=24 L-BU
C2=24 GY C5=6 BK
C3=24 BN C6=16 PU
Body Control Module (BCM)
Class 2 Serial Data
C1 C9 C10 K
Crew Cab Only
C8 A8 A7 A6
C2 B12
1037 L-GN 0.35
1340 OG 2
C396 G
1188 D-GN 0.35 B
1186 GY/ BK 0.35 A
2266 L-GN 0.35 C
1340 OG 2 A
1188 YE 0.35 B
1186 WH 0.35 C
2266 L-BU 0.35 D
DLC Schematics
7E
CONN ID
C1= - - - C5=6 BN
C2=6 BK C6=6 L-GN
C3= - - - C7=6 CM
C4=12 BN C8=6 GY
Junction Block - I/P
Battery Positive Voltage
Power Window Switch Right Rear Down Signal
Power Window Switch Right Rear Up Signal
Power Window Lockout Right Rear Control
Window Switch Down Signal
Window Switch Up Signal
Logic
Window Switch - RR
1047 TN 0.35
1046 BN 0.35
C7 E
Power Window Motor Right Rear Down Control
Power Window Motor Right Rear Up Control
Ground
Interior Lights Dimming Schematics
C2 22
Driver Door Module (DDM)
Window Switch - Driver
CONN ID
C1=4 BK
C2=26 BK
C3=10 BU
C4=10 BK
C5=12 GN
Passenger Window
Right Rear Window
Class 2 Serial Data
Window Switch Down Signal
Window Switch Up Signal
Window Switch Down Signal
Window Switch Up Signal
Logic
Window Motor - Passenger
G 671 BN 2 B
F 670 D-BU 2 A
E 1250 BK 2
A 686 D-BU 2 4
B 687 BN 2 1
Window Motor - RR
G306
C1 2
C2 22
CONN ID
C1=4 BK
C2=26 BK
C3=10 BU
C4=10 BK
C5=12 GN
Passenger Door Module (PDM)
Window Switch - Passenger
Battery Positive Voltage
Power Window Motor Right Front Up Control
Power Window Motor Right Front Down Control
Switch Power
Window Switch Down Signal
Window Switch Up Signal
Class 2 Serial Data
Logic