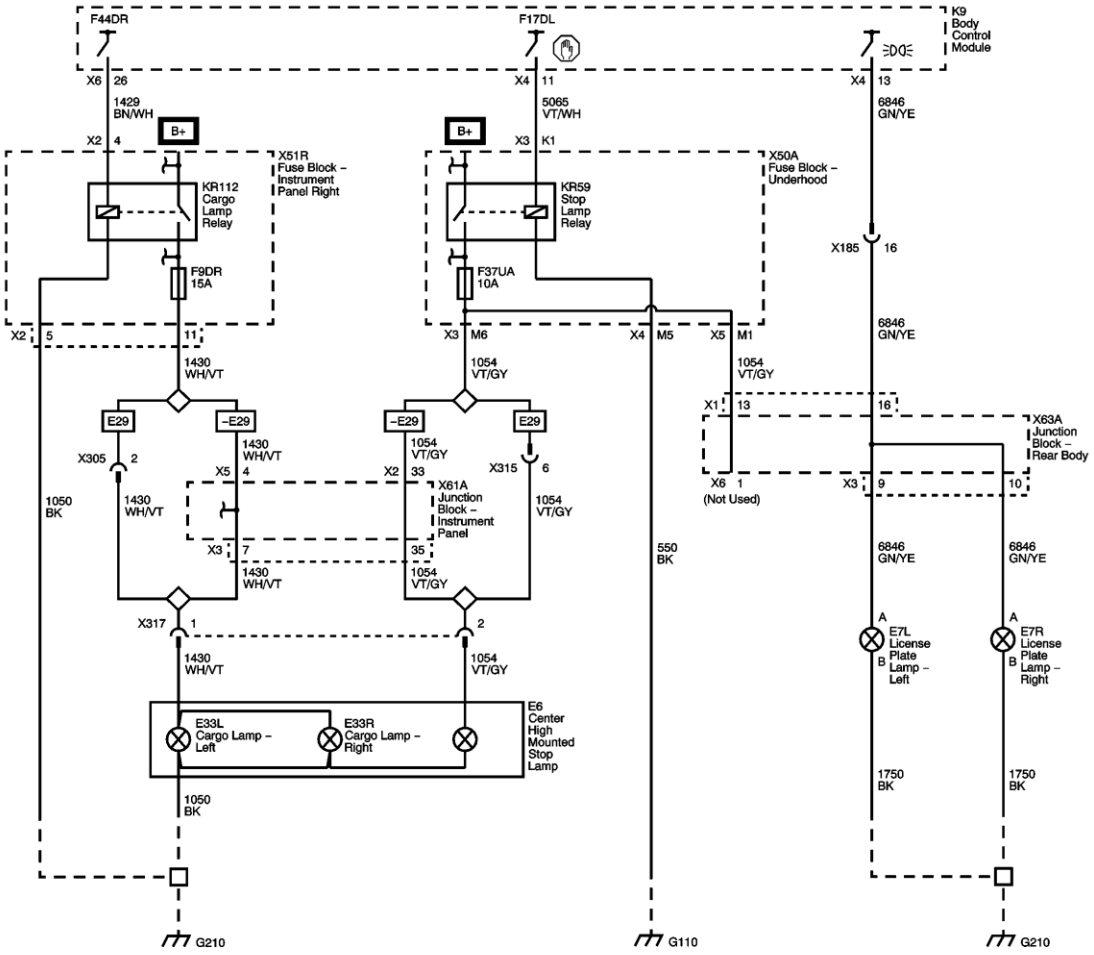
K9
Body
Control
Module
F44DR
F17DL
X6 26
X4 11
X4 13
1429
BN/WH
5065
VT/WH
6846
GN/YE
B+
B+
X2 4
X3 K1
X51R
Fuse Block –
Instrument
Panel Right
KR112
Cargo
Lamp
Relay
F9DR
15A
X50A
Fuse Block –
Underhood
KR59
Stop
Lamp
Relay
F37UA
10A
X185 16
X2 5
11
X3 M6
X4 M5
X5 M1
6846
GN/YE
1430
WH/VT
1054
VT/GY
1054
VT/GY
X1 13
16
X63A
Junction
Block –
Rear Body
E29
–E29
–E29
E29
X305 2
1430
WH/VT
X5 4
1430
WH/VT
X2 33
1054
VT/GY
X315 6
1054
VT/GY
X61A
Junction
Block –
Instrument
Panel
X6 1
(Not Used)
X3 9
10
1050
BK
1430
WH/VT
X3 7
35
1430
WH/VT
1054
VT/GY
550
BK
6846
GN/YE
6846
GN/YE
X317 1
2
1430
WH/VT
1054
VT/GY
A
E7L
License
Plate
Lamp –
Left
B
A
E7R
License
Plate
Lamp –
Right
B
E33L
Cargo Lamp –
Left
E33R
Cargo Lamp –
Right
E6
Center
High
Mounted
Stop
Lamp
1750
BK
1750
BK
1050
BK
G210
G110
G210